CHEVALIER®

Grinding / Turning / Milling

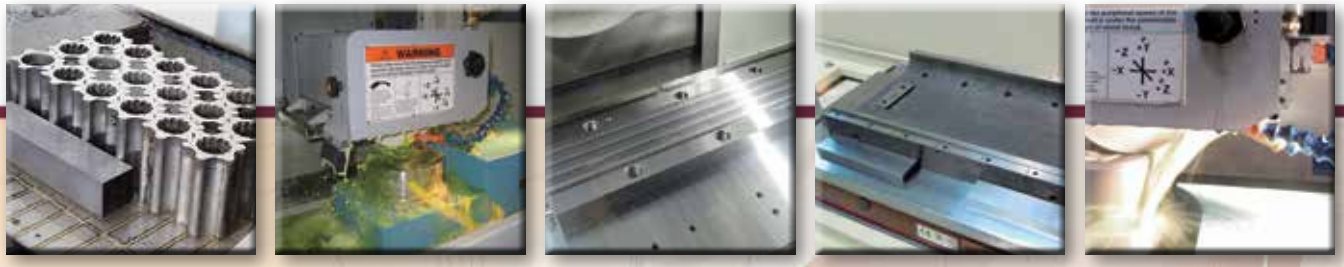



FSG-ADIV Series

Automatic Precision Surface Grinding Machine

FSG-1224ADIV • 1632ADIV • 1640ADIV

FSG-1224ADIV • 1632ADIV • 1640ADIV

Machine Features

Variable Speed Spindle

Enables constant surface speed to allow operator to select correct rpm to match material requirement

In-Machine Dynamic Balancing

Adjust balance weight at the position.
Decrease spindle vibration to eliminate cutting chatter as well as elevate machining quality.



量測之振幅＜1 um

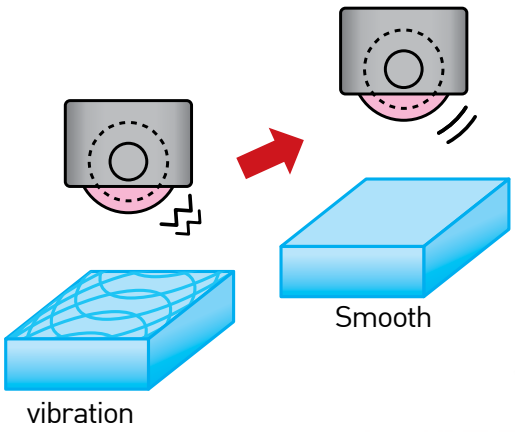



1．試拍可同時拍到螢幕，調整平衡塊
2．再特寫有刻度砂輪作輔助

FSG-1224ADIV • 1632ADIV • 1640ADIV

Machine Features

Loading Force Detection

Loading protection prevents part thermal deformities.
Deformation such as burn mark

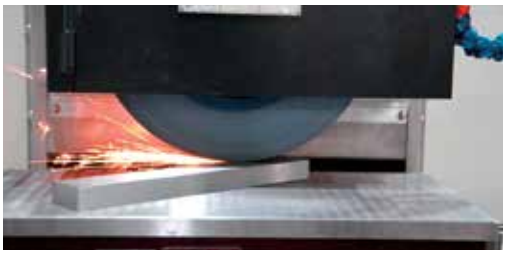

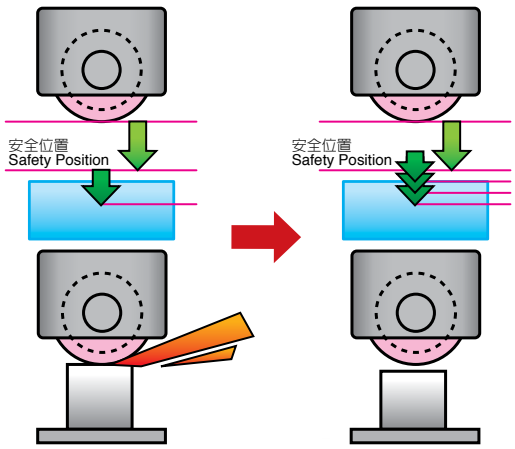

Work table 自動定位修砂 (Opt.)

work table work table work table work table work table work tablework table work tablework table work table work table work tableT work table work table work table



FSG-1224ADIV • 1632ADIV • 1640ADIV

Machine Features

Automatic Precision Surface Grinding Machine - The highly advanced ADIV series of automatic precision surface grinding machines are a result of the ongoing and extensive research and development program at CHEVALIER. In addtion to improved accuracy, quality, and machine life, the overall design of the machine incorporates ergonomics; all operating handwheels, levers ,stroke setting devices and the pendant control panel are arranged to allow ease of operation, which increases working efficiency.

3-Axis Linear Roller Slide Way

All three axis guideway rails are composed of (S55C) steel that is normalized and then hardened by high frequency induction. The guideways are HRC 60-64 after heat treatment. Precision roller bearings run through a sieve to select exactly matched sets which are then preloaded between the linear guideway to provide a guideway system that will ensure excellent accuracy and precise positioning with stick-slip free movement.

Vertical Drive By AC Servo Motor

The wheelhead travelling on a preloaded linear guideway system is driven by a hardened and ground ballscrew and an AC servo motor providing high torque, speed and accurate positioning with a minimum increment of 0.001mm (0.00005"). A manual pulse generator (MPG) is standard for easy operation.

Crossfeed Speed Control

Saddle continuous movement speed is controlled by a AC servo motor for obtaining better grinding surface finish and dressing grinding wheel from table.

FSG-1224ADIV • 1632ADIV • 1640ADIV

Machine Construction

Elevating Guideway System -

The wheelhead and column system is composed of hardened and ground inserted steel guideways and precision roller bearings. The wheelhead and column guideways are preloaded providing zero clearance for precise straight line movement. The low friction wheelhead guideway system enables accurate feeds even at 0.001 mm (0.00005") increments.

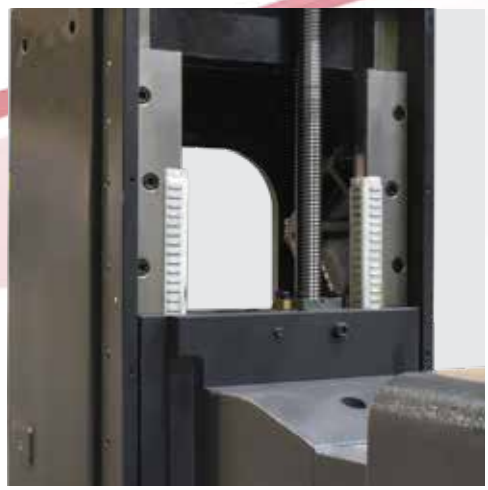

Table Guideway System

The table guideway system is composed of hardened and ground steel guideways with precision needle roller bearings to provide excellent longevity and low friction, and also to provide precise linear movement without deviation, even during rapid traverse movement.

Saddle Guideway System -

The guideway system of the saddle is composed of specially designed preloaded needle roller bearings and hardened and ground slide rails.
The roller bearings consist of independent loading and leading bearings. Loading bearings are to support the vertical load and preloaded leading bearings are to assure accuracy of the cross movement of saddle.
The combination of these two features provide excellent longevity and low friction, stick-slip free accurate movement.



FSG-1224ADIV • 1632ADIV • 1640ADIV

Control Features

Control Station - The control station can be adjusted to a comfortable position for the operator. All switches, buttons, LEDS, indicating lamps, and displays are ergonomically positioned providing user friendly operation.



The control features are:

1. High reliability NC control platform.
2. 10.4" TFT high resolution 65,536 pixel color touch panel control interface.
3. Powerful graphic conversational function with surface / plunge standard built-in grinding program.
4. Brief and clear operation panel.
5. Machine abnormal alarm message display and alarm history record.
6. Y & Z axis home positioning function.
7. Mechanical coordinates and relative coordinates display.
8. Digital I/O check mode makes service system more efficient.
9. Operation friendly, grinding, wheel dressing and automatic compensation can be accomplished easily without making CNC program.

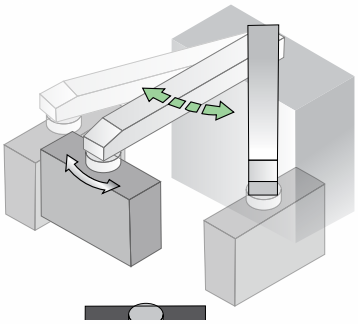

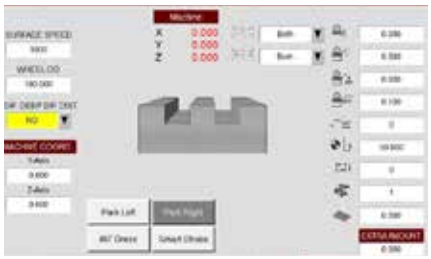

Plunge Grinding Mode

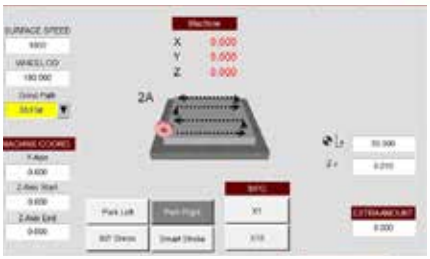

Surface Grinding Mode

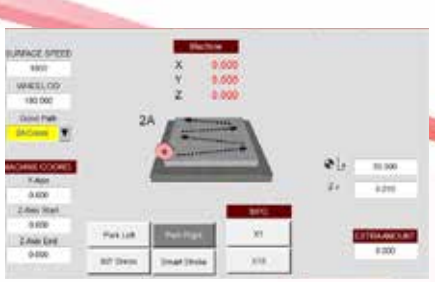

Crisscross Grinding



In-machine Dynamic Balancing

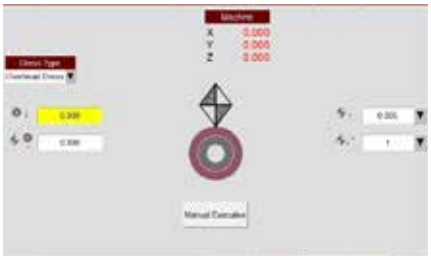

Automatic overhead dresser with compensation (optional)

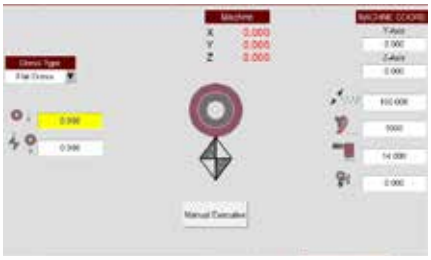

Automatic Dressing on Table (optional)

FSG-1224ADIV • 1632ADIV • 1640ADIV

Optional Accessories

Note: Items marked with • are recommended to be factory installed.

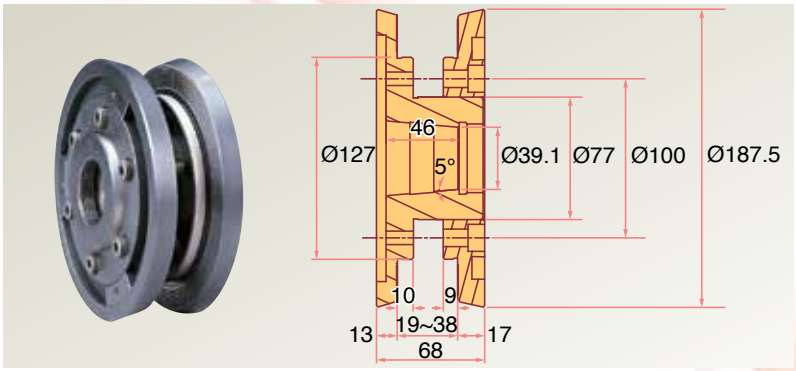

Wheel Flange

Clamping Width: 19~38 mm (0.75"~1.5")



Linear Scale



Balancing Stand with Levelling Bubble

Max. Dia.: 355 mm (14")
Max. Width: 50 mm (2")



Balancing Stand (Roller Type)

Suitable for:
203~355 mm (8"~14")
grinding wheel



Electromagnetic Chuck

1224
300 x 600 mm (11.8" x 23.6")
1632
400 x 800 mm (15.7" x 31.5")
1640
400 x 1,000 mm (15.7" x 39.4")
Voltage: 110 VDC

*Chuck Control is required for all of the above.

• Chuck Controller

Input Voltage: 140 VAC
Output Voltage: 110 VDC



Over-The-Wheel Auto. Straight Line Dressing & Compensation Device

Suitable for: 355 mm (14") Grinding Wheel
Dressing Width: 70 mm (2.8")

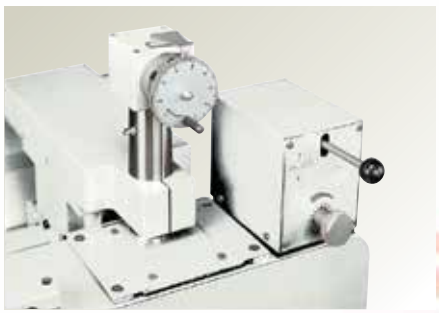

• Parallel Dressing Attachment (Hydraulic)

Suitable for: 355 mm (14") Grinding Wheel
Dressing Width: 70 mm (2.8")



• Double side water baffle

The max. movement decreases 35 mm (1.4")

FSG-1224ADIV • 1632ADIV • 1640ADIV

Optional Accessories



Machine Lamp



- **Parallel Dressing Attachment (Manual Type)**

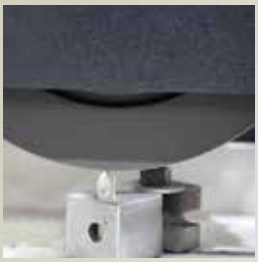



自動定位修砂油壓箱



Coolant System with Double Filter

Volume: 95 L

Pump: 1/8 HP

Coolant Capacity: 20 L/min.

Space: 660 x 480 mm (26" x 19")

Height: 610 mm (24")

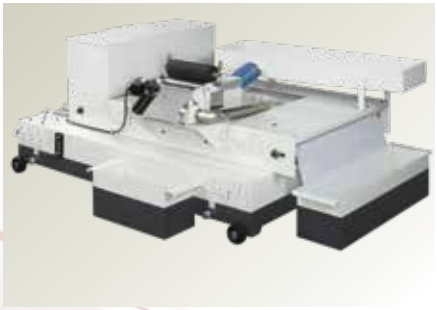

Coolant System with Auto. Paper Feeding Device and Magnetic Separator (with 1 Roll of Paper)

Volume: 120 L

Paper feeding motor: 25 W

Pump: 1/8 HP

Coolant Capacity: 20 L/min.

Space: 1,450 x 620 mm (57" x 24.4")

Height: 760 mm (30")

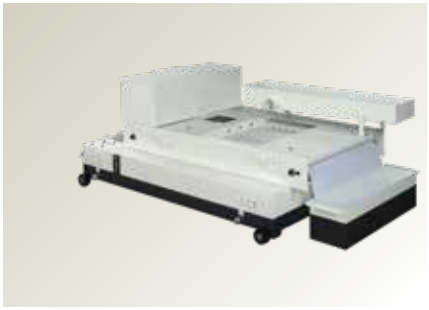

Coolant System with Auto. Paper Feeding Device (with 1 Roll of Paper)

Volume: 120 L

Paper feeding motor: 25 W

Pump: 1/8 HP

Coolant Capacity: 20 L/min.

Space: 1,450 x 620 mm (57" x 24.4")

Height: 760 mm (30")

Paper Filtration: 10μm



Coolant System with Manual Paper Feeding Device

Volume: 85 L

Pump: 1/8 HP

Coolant Capacity: 20 L/min.

Space: 550 x 1,000 mm (21.7" x 39.4")

Height: 775mm(30.5")

Paper Filtration: 10μm

FSG-1224ADIV • 1632ADIV • 1640ADIV

Standard Accessories



Tool box
- Touch-up paint
- Balancing arbor
- Wrench
- Hex. wrench (14mm)
- Diamond dresser with diamond
- Hex. wrench
- Hole plugs



Wheel flange

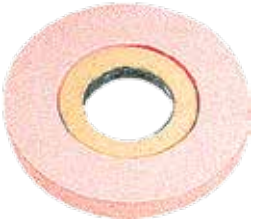

Grinding wheel

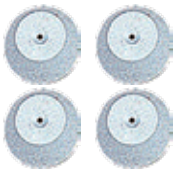

Levelling pads



Levelling screws & nuts



Splash guard

Permissible Load of Machine

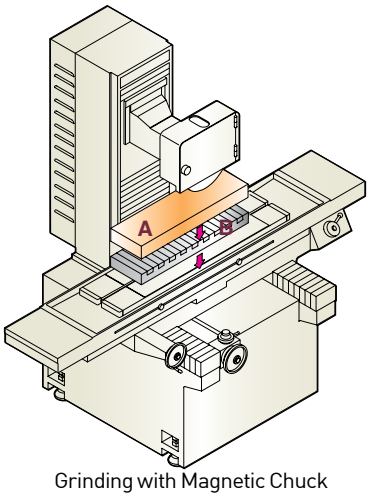

Grinding with Magnetic Chuck

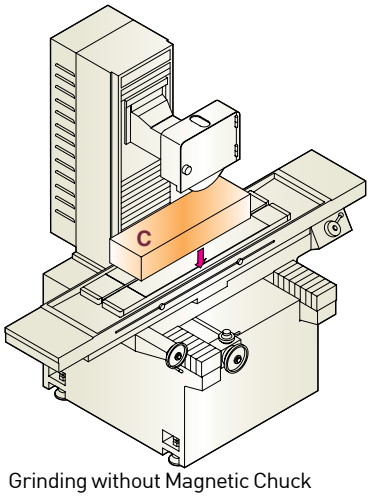

Grinding without Magnetic Chuck

Unit : Kg (lbs.)

The total suggested maximum workloads of table are shown as follows:

A= Workpiece **B**=Magnetic Chuck **C**=A+B

Model	FSG-1224AD IV	FSG-1632AD IV	FSG-1640AD IV
A	314 (690)	403 (886)	423 (930)
B	106 (233)	197 (433)	247 (543)
C	420 (923)	600 (1,319)	670 (1,473)

FSG-1224ADIV • 1632ADIV • 1640ADIV

Specification

Description		FSG-1224ADIV	FSG-1632ADIV	FSG-1640ADIV
Table Size		300 x 600 mm (11.8" x 23.6")	400 x 800 mm (15.7" x 31.5")	400 x 1,000 mm (15.7" x 39.4")
Max. Grinding Length	Longitudinal	610 mm (24")	810 mm (32")	1,015 mm (40")
Max. Grinding Width	Crosswise	305 mm (12")	405 mm (16")	
Max. Grinding High		432 mm (17")		
Max. Distance from Table Surface to Spindle Centerline		610 mm (24")		
Standard Magnetic Chuck Size		300 x 600 mm (11.8" x 23.6")	400 x 800mm (15.7" x 31.5")	400 x 1,000 mm (15.7" x 39.4")
Longitudinal Movement of Table	Longitudinal travel, hydraulic	650 mm (25.6")	850 mm (33.5")	1,050 mm (41.3")
	Maximum travel, manual	700 mm (27.6")	900 mm (35.4")	1,100 mm (43.3")
	Table speed (stepless)	5~25 m/min (16~82 fpm)		
Cross Movement of Table	Rapid travel (approx.)	0~2,250 mm/min (0~99 ipm)		
	Automatic transverse increment	3~32 mm (0.1"~1.3")		
	Maximum travel	320 mm (12.6")	420 mm (16.5")	
		Opt. 285 mm (11.2") (with double side water baffle)	Opt. 385 mm (15.1") (with double side water baffle)	
	Mini input	0.001 mm (0.0001")		
Wheelhead Vertical Infeed	Automatic infeed	0.001~0.04 mm (0.00005"~0.002")		
	Rapid travel (approx.)	675 mm/min. (45 ipm)		
	Mini input	0.001 mm (0.0001")		
Grinding Spindle Drive	Speed	60 Hz/0~1,750 rpm, 50 Hz/0~1,450 rpm		
	Power rating	5HP/4P (Opt. 7.5kW)		
Grinding Wheel	OD x Width x Bore	Ø355 x 50 xØ127 mm (Ø14" x 2" x Ø5") Double Recess		
Hydraulic System	Power rating	1 HP/6P	2 HP/6P	
Crossfeed Drive	Power rating	AC servo 0.85 kW		
Elevating Drive	Power rating	AC servo 0.4 kW		
Floor Space	Total space required	2,950 x 1,490 x 1,940 mm (116" x 59" x 76.37")	3,540 x 1,730 x 1,940 mm (139.4" x 68" x 76.37")	4,280 x 1,730 x 1,940 mm (168.5" x 68" x 76.37")
Weights	Net weight approx.	2,200 Kgs (4,840 lbs.)	2,900 Kgs (6,380 lbs.)	3,500 Kgs (7,700 lbs.)
	Gross weight approx.	2,700 Kgs (5,940 lbs.)	3,550 Kgs (7,810 lbs.)	4,200 kgs (9,240 lbs.)
Rated Power, Approx.		5.6 kW (7.5 HP)	6.3 kW (8.5 HP)	
Packing Dimensions	L x W x H	2,100 x 1,760 x 2,230 mm (82.7" x 69.3" x 87.8")	3,700 x 2,020 x 2,230 mm (145.7" x 79.5" x 87.8")	4450 x 2,020 x 2,230 mm (175.2" x 79.5" x 87.8")

* All content is for reference only and may be subject to change without notice or obligation.

FSG-1224ADIV • 1632ADIV • 1640ADIV

Dimensional Drawings

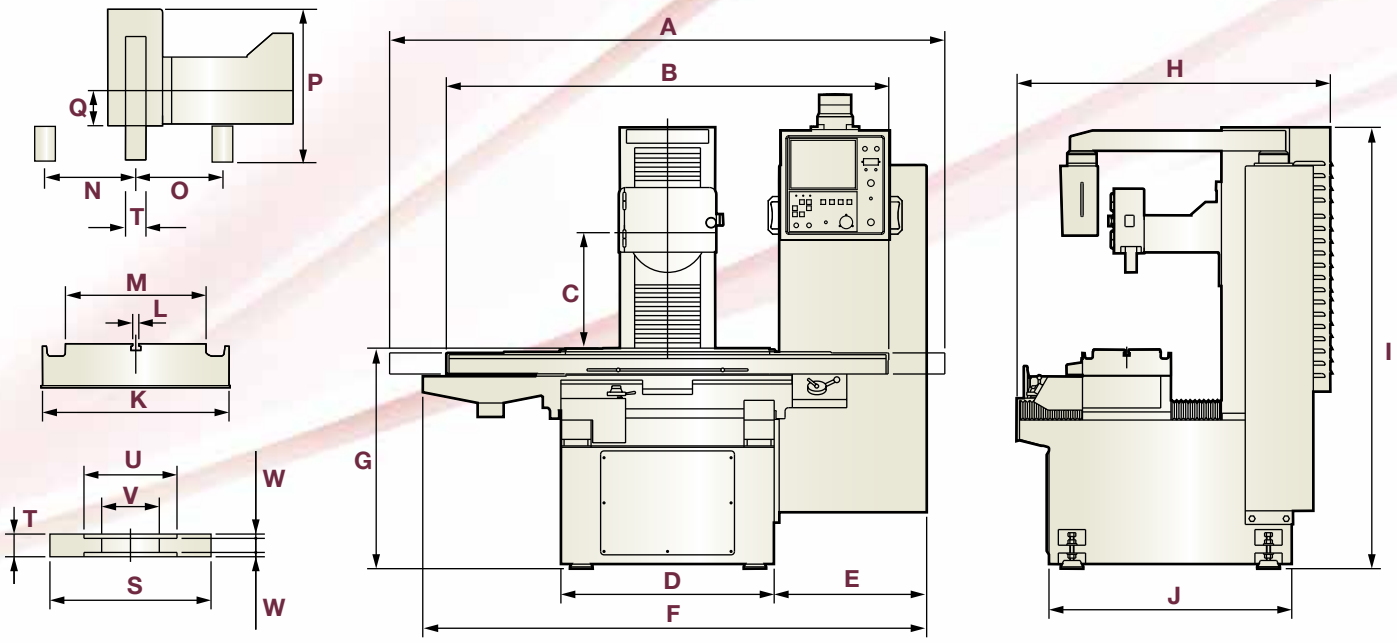

Unit : mm (")

Item	FSG-1224ADIV	FSG-1632ADIV	FSG-1640ADIV
A	2,950 (116.1")	3,540 (139.4")	4,280 (168.5")
B	2,150 (84.6")	2,560 (100.8")	3,000 (118.1")
C	610 (24")		
D	940 (37")	1,090 (42.9")	1,600 (63")
E	600 (23.6")		300 (11.8")
F	2,430 (95.7")	2,840 (111.8")	3,480 (137")
G	970 (38.2")	980 (38.6")	
H	1,490 (58.7")	1,733 (68.2")	
I	2,108 (82.9")		
J	1,070 (42.1")	1,311 (51.6")	
K	390 (15.2")	500 (19.7")	
L	14 (0.6")		
M	305 (12")	405 (15.9")	
N	160 (6.3")	205.5 (8.1")	
O	160 (6.3")	214.5 (8.4")	
P	386 (15.2")		
Q	86 (3.4")		
S	355 (14")		
T	50 (2")		
U	205 (8.1")		
V	127 (5")		
W	9.5 (0.4")		

©1978-2018 CHEVALIER® All Rights Reserved.



Grinding Machine



Grinding Machine



Turning Machine



Milling Machine

Headquarters

FALCON MACHINE TOOLS CO., LTD.

No. 34, Hsing Kong Road, Shang Kang, Chang Hua
TAIWAN 50971
Tel: +886 4 799 1126 Fax: +886 4 798 0011
www.chevalier.com.tw
overseas@chevalier.com.tw

U.S.A. Headquarters

CHEVALIER MACHINERY INC.

9925 Tabor Place, Santa Fe Springs, CA 90670 U.S.A.
Tel: (562) 903 1929 Fax: (562) 903 3959
www.chevalierusa.com
info@chevalierusa.com

All content is for reference only and may be subject to change without notice or obligation.

FSG-12/16ADIV_EU_201803 / P8 /@