CHEVALIER®

Grinding / Turning / Milling





FSG Series

DOUBLE COLUMN WITH FIXED BEAM CNC GRINDER

FSG-4060 • 4080 • 40120DC
FSG-5060 • 5080 • 50120DC
FSG-6060 • 6080 • 60120DC

FSG-40 / 50 / 60DC

DOUBLE COLUMN WITH FIXED BEAM CNC GRINDER
HIGH RIGIDITY - HIGH PRECISION - EASY OPERATION

Chevalier's Double Column Grinder with Fixed Beam is designed for shops demanding speed, rigidity and a very large grinding area. The FSG series grinding machines are ideal for grinding large workpieces such as guideways for heavy machinery, wind turbines for power generation and molds for automotive and oil exploration.

- **Patented Elevation Guideway and Spindle Structure**
- **Patented Guildway Adjustable Design for Saddle Movement**
- **Patented Enlarged Double "V" Longitudinal Guideway Design**
- **User Friendly Conversational Programming**





FSG-6080DC : (W) 4,175 x (L) 6,430mm

Note: The photo shown above contains optional accessories.
For the latest photos, please contact with sales department.

MECHANICAL STRUCTURE

Patented Elevation Guideways and Spindle Structure

- Four square slideways ensure maximum rigidity and heavy-duty grinding capability.
- The spindle head on the Y-axis moves on 4 hardened, ground and wider guideways which travels on Turcite-B anti-friction material. A worm gear reducer and servo motor coupled with high accuracy ballscrew and a pneumatic counterweight balance system ensure smooth movement and prevent the head dropping down in case of a power failure.

Saddle System Design

- The ball nut rotates instead of the ballscrew thereby eliminating lubrication oil loss, ballscrew vibration and heat build up during continuous movement under heavy loads.

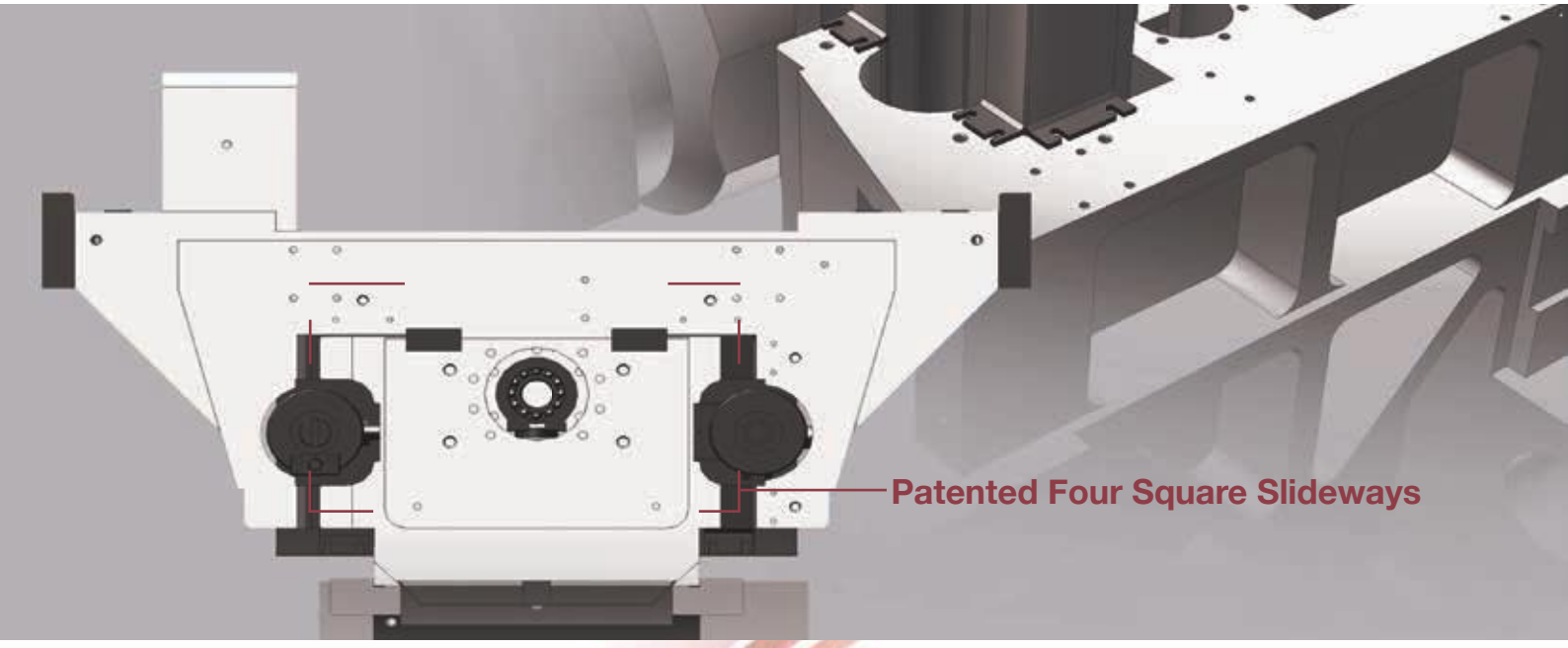



Spindle Construction

- The spindle in front runs with two P4 grade super precision contact ball bearings and NN type precision roller bearings.The spindle in rear is supported with two super precision angular contact bearings. Special grease suitable for high speed rotation is loaded and no additional lubrication is required. The cartridge outer diameter of spindle is grooved to accommodate an optional oil cooling device to minimize heat.

Horizontal Grinding Head

- The horizontal wheelhead is positioned with a Class C2 ballscrew and is counterbalanced with a pneumatic cylinder to ensure precise movement.
- The Ø500 x 100 x 127mm (20" x 4" x 5") grinding wheel is driven by a 25 HP spindle motor. The spindle runs with NN type tapered roller bearings for extreme rigidity and high precision.

MECHANICAL STRUCTURE

Machine Base and Table Design

• Base and table design is Meehanite cast iron. The X axis of table is coated with Turcite B and travels on the hardened and ground double “V” base guildway with smooth stick-slip free precision movement.

Automatic Lubrication System

• The machine utilizes two kinds of lubrication systems: the first one is a centralized lubrication system with pressure release function to provide oil throughout the machine including the Y-axis wheelhead guideways, Z-axis cross slide, and ballscrews; the second one is a continuous lubrication system to provide lubrication oil for longitudinal movement.

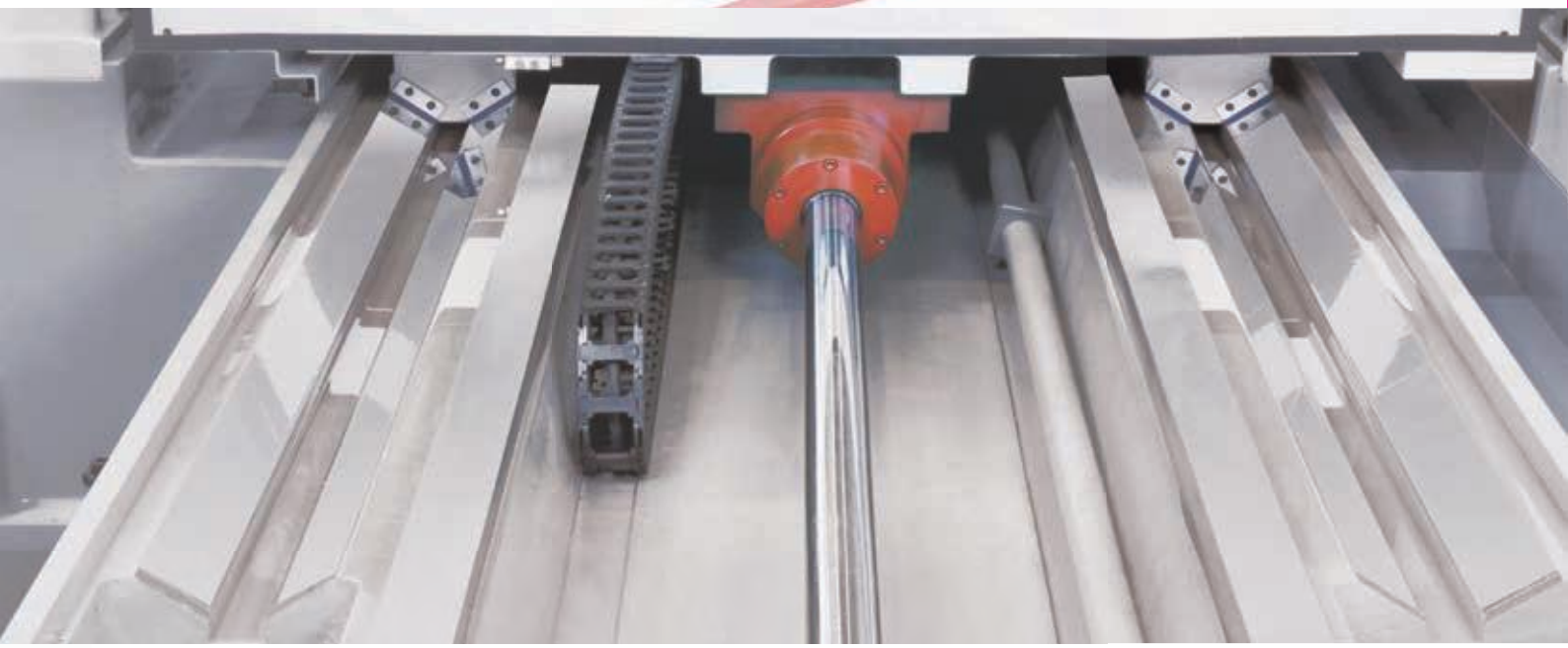

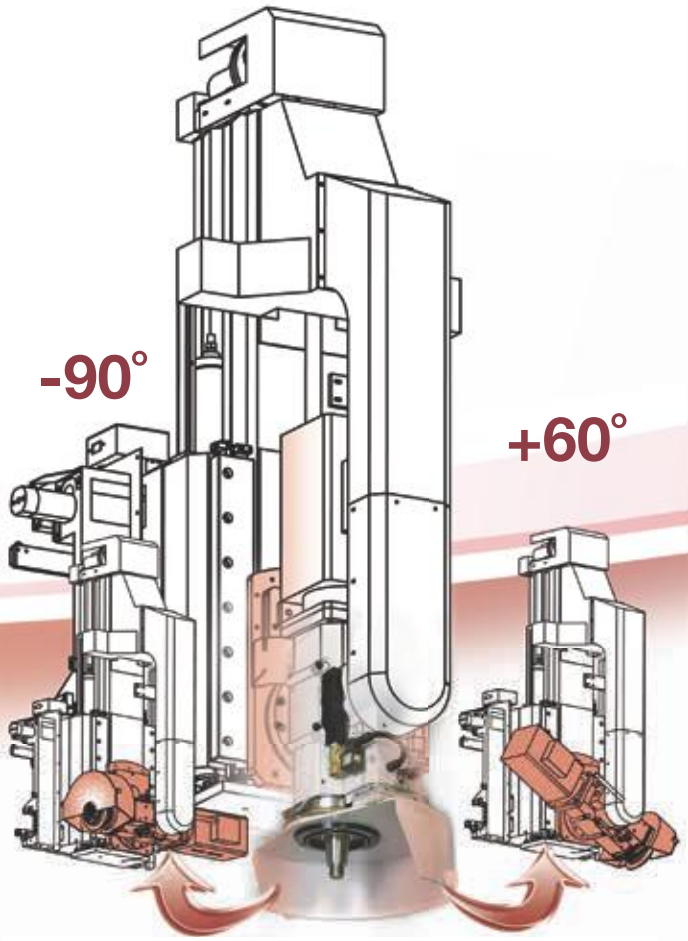

Patented Linear Guideway Design

• High precision roller type linear guideway design for crossway movement of the spindle head with a patented adjustment design ensures machine rigidity, precision movement and longer working life.

Vertical Grinding Head (Optional)

• Equipped with penumatic counter weight balance system and gear transmission to achieve the high positioning accuracy.

• Rotation structure is driven by speed reducer and servo motor to save time and power consumption.

• Max. rotation -90˚ and +60˚ , flexible and easy operation.

• Hydraulic clamp/unclamp device assists to position at assigned degree regardless of automatic or manual operation.

SMART CNC CONTROLLER

USER FRIENDLY CONVERSATIONAL PROGRAMMING

Applicable For FSG-40 / 50 / 60DC Series

- CHEVALIER SMART CNC controller (PC Based).
- 10.4" TFT color screen.
- Table stroke can be adjusted from screen (patented design).
- Internet/Intranet connectivity.
- Conversational graphics program for grinding and dressing.
- Surface/ Plunge/ Criss-cross/ Canned cycles.
- Optional profile grinding programs.
- Integrated conversational grinding and wheel dressing with automatic compensation.
- Grinding simulation mode executable through the MPG handwheel.
- Non-equal pitch and depth grinding capability.
- Program transfers through Ethernet port.
- FANUC CNC program compatible.
- Automatic energy-saving function(Optional).
- Support USB and CF card and screen can be capture and saved for record and service.



FRIENDLY INTERFACE DESIGN

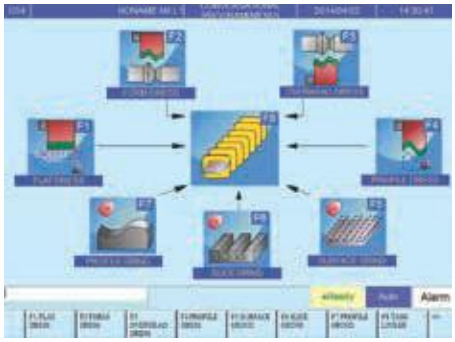

Grinding Menu

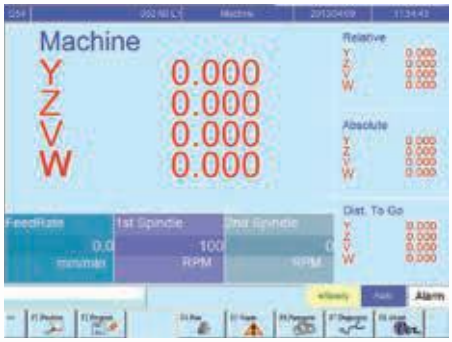

Machining Axis Display

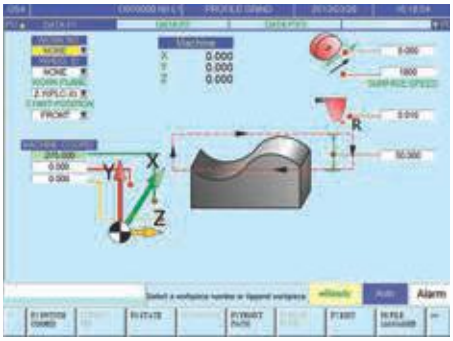

Concave / Convex Conversational Setting Screen

STANDARD ACCESSORIES

1. Oil cooler for hydraulic system
2. Air conditioner for electric cabinet
3. Grinding wheel (Ø500 x 100 x 127mm, Horizontal head x1)
4. Wheel flanges (1 for horizontal spindle)
5. Operator platforms (both ends)
6. Tool kit (one tool set and lifting fixture)
7. Diamond dresser with diamond
8. Leveling bolts, nuts and pads
9. Balancing arbor
10. Operation manual
11. Paper filter type coolant system (500L)

(This system is suitable for stand head mechanism)

The Counterbalance System of Control Pendant (Also applicable on vertical head mechanism)



- The control pendant has its own counter balance system for fast and precise positioning.

Paper filter type coolant system (500L)



Hydraulic tank and oil cooler

- The hydraulically driven table can reach speeds of up to 25m/min. A built-in oil cooler stabilizes the hydraulic oil temperature to maintain a constant viscosity.



OPTIONAL ACCESSORIES

1. Electromagnetic chuck (with chuck control)
2. Table mounted grinding wheel dresser (without diamond disc)
3. Automatic paper filter type coolant system with magnetic separator and chiller(with temperature control system) (700L)
4. Dynamic wheel balancing system
5. Y, Z, V, W, axis linear encoder
6. Wheel balancing stand
7. Extra wheel flange
8. Wheel head type dresser for Over-head dresser for horizontal spindle

Dynamic wheel balancing system (SCHMITT Industries, Inc.)



magnetic separator and chiller (with temperature control system) (700L)



Automatic paper filter type coolant system with magnetic separator and chiller: (With temperature control system) (Optional)

- Coolant chiller
- Drum type filtration system
- Capacity:2000L



MECHANICAL DIMENSIONS

Model	FSG-4060DC	FSG-4080DC	FSG-40120DC
A	5,430mm(213.7")	6,430mm(235.1")	8,430mm(331.8")
B	4,160mm(163.7")	5,160mm(203.1")	7,160mm(281.8")
C	4,210mm(165.7")	4,210mm(165.7")	4,210mm(165.7")
D	1,050mm(41.3")	1,050mm(41.3")	1,050mm(41.3")
E	1,150mm(45.2")	1,150mm(45.2")	1,150mm(45.2")
F	1,400mm(55")	1,400mm(55")	1,400mm(55")

40Series / 3,140mm(123,6")
50Series / 3,410mm(134,3")
1,200mm(47,2")

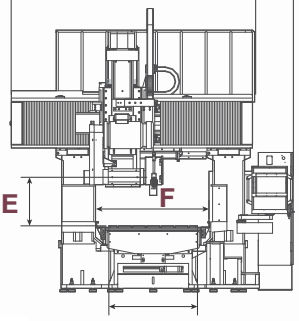

Table Size
1,000mm(39.3") /1,250mm(49")

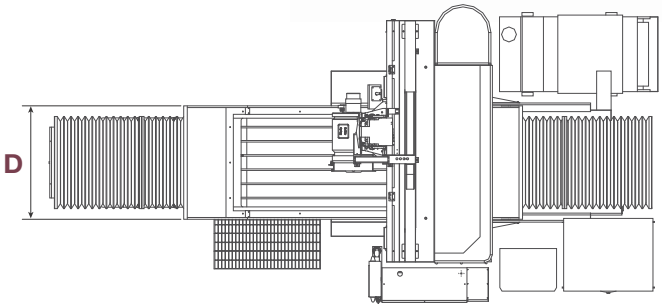

Model	FSG-5060DC	FSG-5080DC	FSG-50120DC
A	5,430mm(213.7")	6,430mm(235.1")	8,430mm(331.8")
B	4,160mm(163.7")	5,160mm(203.1")	7,160mm(281.8")
C	4,210mm(165.7")	4,210mm(165.7")	4,210mm(165.7")
D	1,300mm(51")	1,300mm(51")	1,300mm(51")
E	1,150mm(45.2")	1,150mm(45.2")	1,150mm(45.2")
F	1,650mm(64.9")	1,650mm(64.9")	1,650mm(64.9")

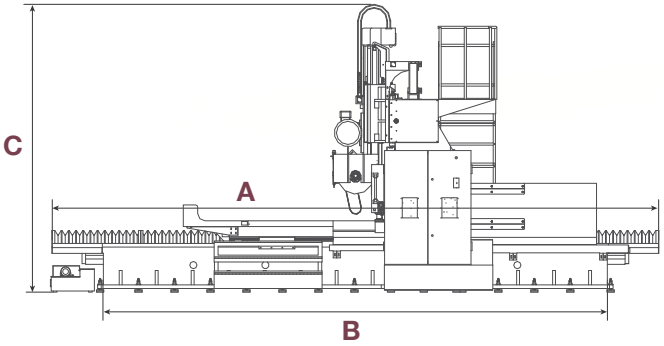

HORIZONTAL GRINDING HEAD TRAVEL

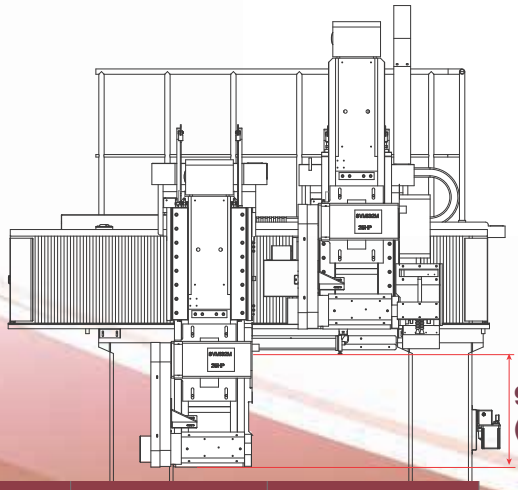

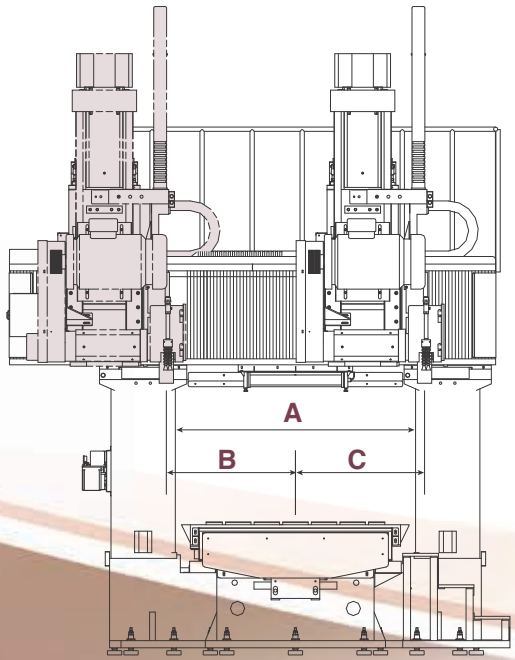

Model	FSG-40	FSG-50	FSG-60
A	1,556mm(61.2")	1,806mm(71.1")	2,056mm(80.9")
B	778mm(30.6")	903mm(35.55")	1,028mm(40.47")
C	778mm(30.6")	903mm(35.55")	1,028mm(40.47")

MECHANICAL DIMENSIONS

Model	FSG-6060DC	FSG-6080DC	FSG-60120DC
A	5,430mm(213.7")	6,430mm(235.1")	8,430mm(331.8")
B	4,160mm(163.7")	5,160mm(203.1")	7,160mm(281.8")
C	4,210mm(165.7")	4,210mm(165.7")	4,210mm(165.7")
D	1,550mm(61")	1,550mm(61")	1,550mm(61")
E	1,150mm(45.2")	1,150mm(45.2")	1,150mm(45.2")
F	1,900mm(74.8")	1,900mm(74.8")	1,900mm(74.8")

Horizontal Head / 4.175mm(164.4")
Horizontal & Vertical Head / 6,175mm (243")

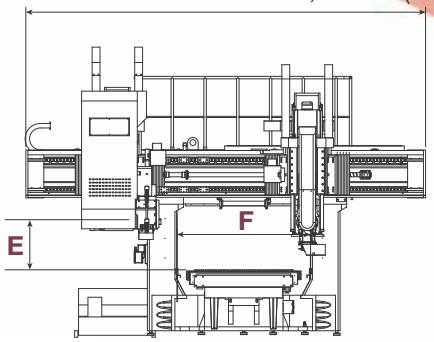

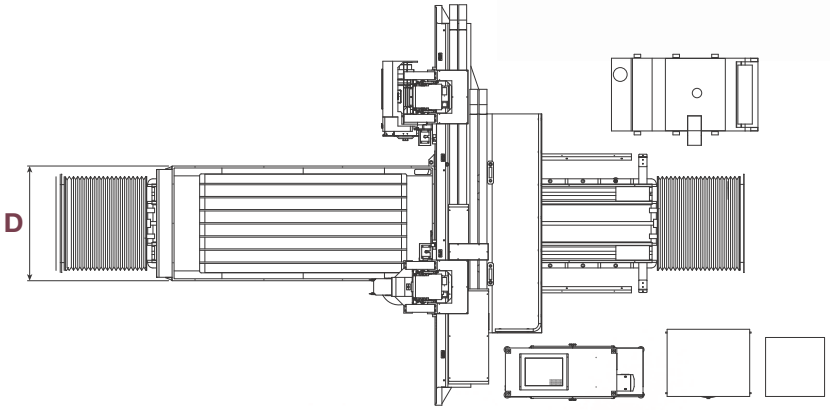

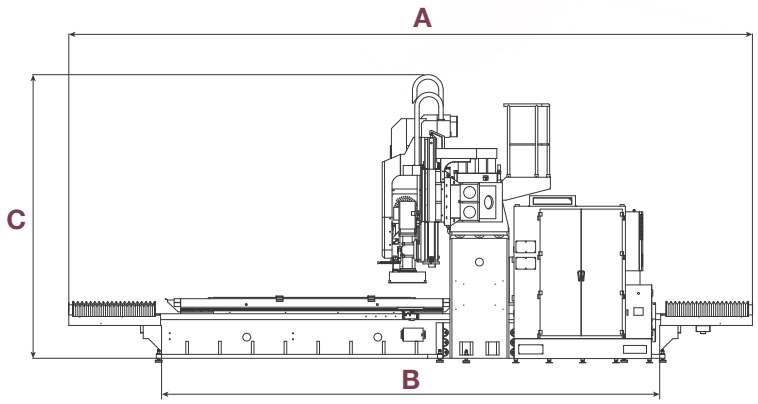

APPLICATIONS

Applicable on vehicle industry, aerospace industry, machinery and metal industry, pneumatic & hydraulic parts industry, electronics industry, textile industry, automation industry and others.

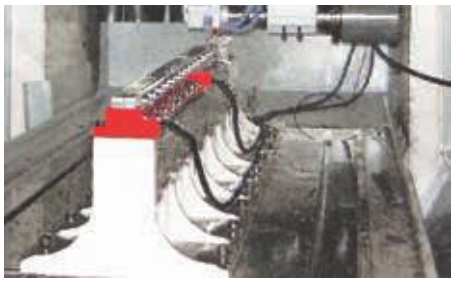
Automation Industry (Linear Guideway)


Machinery & Metal Industry(Casting)


Electronics Industry (LCD TV)

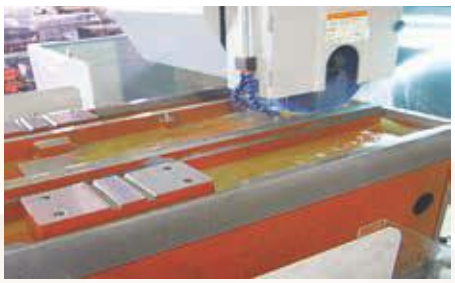
Machinery & Metal Industry (Casting)


Building Industry (Tile Molds)

MACHINE SPECIFICATIONS

ITEM	DESCRIPTION			FSG-4060DC	FSG-4080DC	FSG-40120DC
Capacity	Max. grinding length-longitudinal			1,500mm (59")	2,000mm (79")	3,000mm (118")
	Max. grinding width-crosswise			1,000mm(39.3")		
	Distance from table to spindle centerline (Vertical Head is optional accessory)			Horizontal Head 1,150mm (45.2"), Optional 1,450mm (57") Vertical Head 750mm (29.5") & 1,050mm (41.3")★		
	Max. workpiece weight			3,500kg	4,500kg	5,500kg
Table	Table working size			1,000mm x 1,500mm (39.3" x 59")	1,000mm x 2,000mm (39.3" x 79")	1,000mm x 3,000mm (39.3" x 118")
	T-slots (W x Dist. x No.)			22mm x 200mm x 5 (0.9" x 7.9" x 5)		
	Distance between column (Door width)			1,400mm (55")		
	Table speed			5~25m/min (16~82fpm)		
	Max. table stroke			1,700mm (67")	2,200mm (86.6")	3,200mm (126")
Transverse movement (Z / W axis)	Max. stroke			1,250mm (49")		
	Feed speed			0~5m/min (0~16.4fpm)		
	Min. input value			0.001mm (0.0001")		
Elevating movement	Horizontal head		Max. stroke	900mm (35.4")		
			Feed speed	0~1m/min (0~3.2fpm)		
			Min. input value	0.001mm (0.0001")		
			Vertical balancing device	Pneumatic counterweight		
	Vertical head (Optional)		Max. feed stroke	900mm (35.4")		
			Feed speed	0~1m/min (0~3.2fpm)		
			Min. input value	0.001mm (0.0001")		
			Vertical balancing device	Pneumatic counter weight		
Spindle Speed & Grinding Wheel	Spindle	Horizontal head	Spindle speed	500~2,000rpm		
		Vertical head (Optional)	Spindle speed	500~2,000rpm★		
	Wheel size	Horizontal head	Wheel size (OD x W x Bore)	Ø500 x 100 x 127mm (20" x 4" x 5")		
		Vertical head (Optional)	Wheel size (OD x W x Bore)	Ø400 x 50 x 127mm (16" x 2" x 5")★		
Control system				CHEVALIER SMART CNC Control		
Motors	Horizontal head spindle motor			18.75kW (25HP)		
	Vertical head spindle motor (Optional)			15kW (20HP)★		
	Hydraulic tank motor			12.5kW (17HP)	17kW (23HP)	
Power requirement	Power required			60Kva	65Kva	74Kva
	Pressure			6Kg/cm²		
Tank capacities	Hydraulic tank volume			680L		800L
	Lubricant tank volume			180L		
	Coolant tank volume			500L		
Machine dimensions	Machine height(H)			4,210mm (166")		
	Machine weight			27,800kg (61,288 lbs.)	17,800kg (39,242 lbs.)	20,600kg (45,415 lbs.)
Accuracy	Repeatability accuracy			0.008mm (0.0003")		
	Positioning accuracy			0.015mm (0.0006")		
	Accuracy standard			ISO 4703		

★ For FSG-40/50 DC Series, only one Grinding Head can be installed on the machine, either Horizontal Head or Vertical Head.

Unit: mm (")

	FSG-5060DC	FSG-5080DC	FSG-50120DC	FSG-6060DC	FSG-6080DC	FSG-60120DC
	1,500mm (59")	2,000mm (79")	3,000mm (118")	1,500mm (59")	2,000mm (79")	3,000mm (118")
	1,250mm (49")			1,500mm(59")		
	Horizontal Head 1,150mm (45.2"), Optional 1,450mm (57") Vertical Head 750mm (29.5") & 1,050mm (41.3")★			Horizontal Head 1,150mm (45.2"), Optional 1,450mm (57") Vertical Head 750mm(29.5"), Optional 1,050mm (41.3")		
	4,000kg	5,000kg	6,000kg	6,000kg	7,000kg	8,000kg
	1,250mm x 1,500mm (49" x 59")	1,250mm x 2,000mm (49" x 79")	1,250mm x 3,000mm (49" x 118")	1,500mm x 1,500mm (59" x 59")	1,500mm x 2,000mm (59" x 79")	1,500mm x 3,000mm (59" x 118")
	22mm x 200mm x 6 (0.9" x 7.9" x 6)			22mm x 200mm x 7 (0.9" x 7.9" x 7)		
	1,650mm (65")			1,900mm (75")		
	5~25m/min (16~82fpm)					
	1,700mm (67")	2,200mm (86.6")	3,200mm (126")	1,700mm (67")	2,200mm (86.6")	3,200mm (126")
	1,500mm (59")			1,700mm (67")		
	0~5m/min (0~16.4fpm)			0~5m/min (0~16.4fpm)		
	0.001mm (0.0001")			0.001mm (0.0001")		
	900mm (35.4")			900mm (35.4")		
	0~1m/min (0~3.2fpm)			0~1m/min (0~3.2fpm)		
	0.001mm (0.0001")			0.001mm (0.0001")		
	Pneumatic counter weight			Pneumatic counter weight		
	900mm (35.4")			900mm (35.4")		
	0~1m/min (0~3.2fpm)			0~1m/min (0~3.2fpm)		
	0.001mm (0.0001")			0.001mm (0.0001")		
	Pneumatic counter weight			Pneumatic counter weight		
	500~2,000rpm			500~2,000rpm		
	500~2,000rpm★			500~2,000rpm		
	Ø500 x 100 x 127mm (20" x 4" x 5")					
	Ø400 x 50 x 127mm (16" x 2" x 5")★			Ø400 x 50 x 127mm (16" x 2" x 5")		
	CHEVALIER SMART CNC Control					
	18.75kW (25HP)			18.75kW (25HP)		
	15kW (20HP)★			15kW (20HP)		
	12.5kW (17HP)	17kW (23HP)		17kW (23HP)		24.2kW (32HP)
	65Kva	74Kva	79Kva	74Kva	79Kva	
	6Kg/cm²			6Kg/cm²		
	800L		950L			1,250L
	180L					
	500L					
	4,210mm (166")					
	25,500kg (56,100 lbs.)	37,500kg (82,500 lbs.)	30,000kg (66,000 lbs.)	48,000kg (105,600 lbs.)	35,800kg (78,925 lbs.)	33,200kg (73,193 lbs.)
	0.008mm (0.0003")					
	0.015mm (0.0006")					
	ISO 4703					

*All content is for reference only and may be subject to change without notice or obligation.

©1978-2014 CHEVALIER® All Rights Reserved.

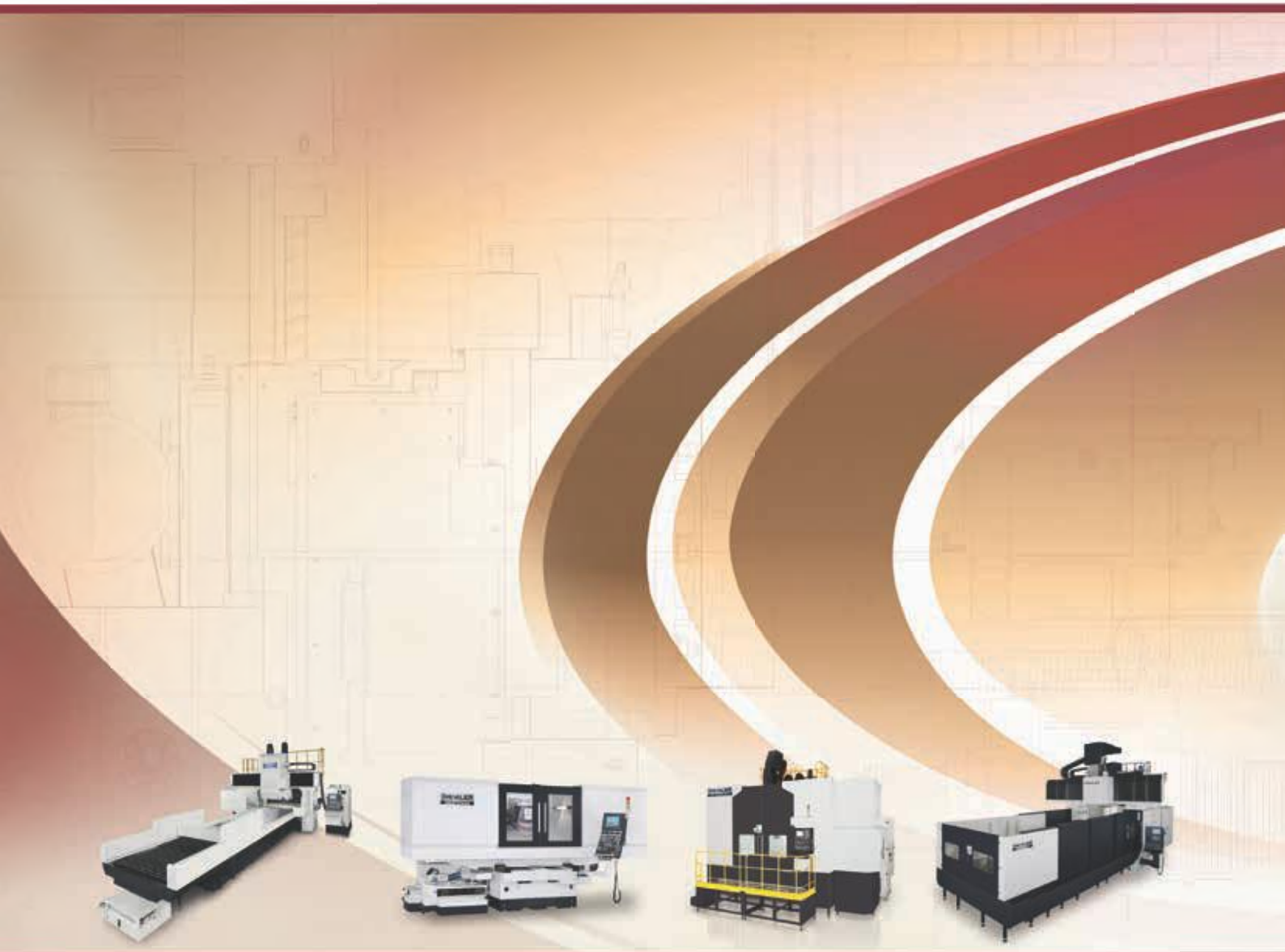

Grinding Machine | Grinding Machine | Turning Machine | Milling Machine

Headquarters
FALCON MACHINE TOOLS CO., LTD.
No. 34, Hsing Kong Road, Shang Kang, Chang Hua
TAIWAN 50971
Tel: +886 4 799-1126 Fax: +886 4 798-0011
www.chevalier.com.tw
overseas@chevalier.com.tw
TA-YA Factory Tel: +886 4 2567-3266

U.S.A. Headquarters
CHEVALIER MACHINERY INC.
9925 Tabor Place, Santa Fe Springs, CA 90670 U.S.A.
Tel: (562) 903-1929 Fax: (562) 903-3959
www.chevalierusa.com
info@chevalierusa.com

ISO 9001 ISO 9001 BSMI REGISTERED CERT. NO. SM1Y027 IT'S VERY WELL MADE IN TAIWAN CE

All content is for reference only and may be subject to change without prior notice or obligation.

2916-00049C00 / 201405 / 1000 P5