supfina

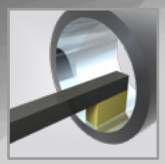

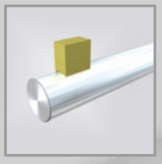

Pneumatic superfinishing attachment for mounting on small, medium and large carrier machines for superfinishing of ground and fine turned surfaces. Wellsuited for narrow grooves between high shoulders with small undercuts. In addition to cylindrical components, the attachment can also be used on flat, lightly convex or lightly concave surfaces.

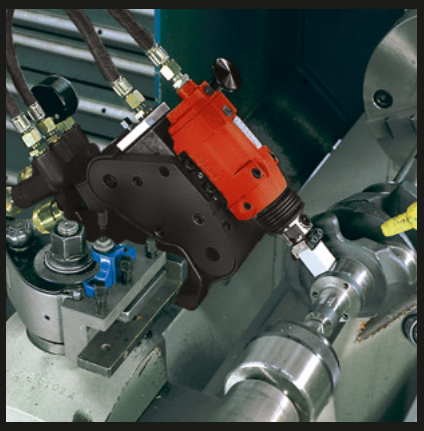

Superfinishing Attachment 100

Superfinishing Attachment 100

The superfinishing attachment series 100 was designed for daily use. The rugged, pneumatically operated oscillator works with resistant transfer elements to ensure balanced running.

The complete oscillator drive runs on precision ball guides which ensures a precise parallel movement to the work piece surface. The oscillation frequency and the vibration amplitude are adjusted with a valve.

The stone guide is actuated pneumatically and the contact pressure of the superfinishing stone is finely adjustable.

The wear of the superfinishing stone is automatically compensated.

Technical specifications	Supfina 100
Frequency DH/min, max min	5100 3300
Amplitude in mm	±0.35 – 0.4
Air pressure in bar	4.5
Air consumption in Nm^3/h	6 – 7
Unit weight in kg	11.0
Stone guide type	21.01
Stone guide stroke in mm	25
No. of stone guides	1
Piston surface in cm^2	10
Compressed air supply	Quick release coupling NW 7.2 or internal thread G 1/2

Supfina 100

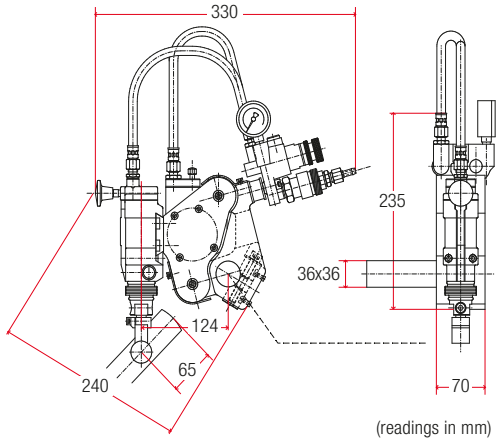

Accessories

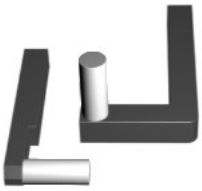

Further attachment holders are available for processing within constricted areas and conical or flat surfaces.

Reducing adapters make it possible to use smaller stones, with widths of 15 mm and smaller.

Coolant Filter Unit
The superfinishing process requires ample flushing to the work surface. A built in filter ensures that the flushing agent will remain clean.

Technical changes reserved

Supfina Grieshaber GmbH & Co. KG
Schmelzegrün 7 · 77709 Wolfach / Germany
Phone +49 7834 866-0 · Fax +49 7834 866-200
info@supfina.com