Centerless Grinder

UNI
TECH

Centerless grinding introduction

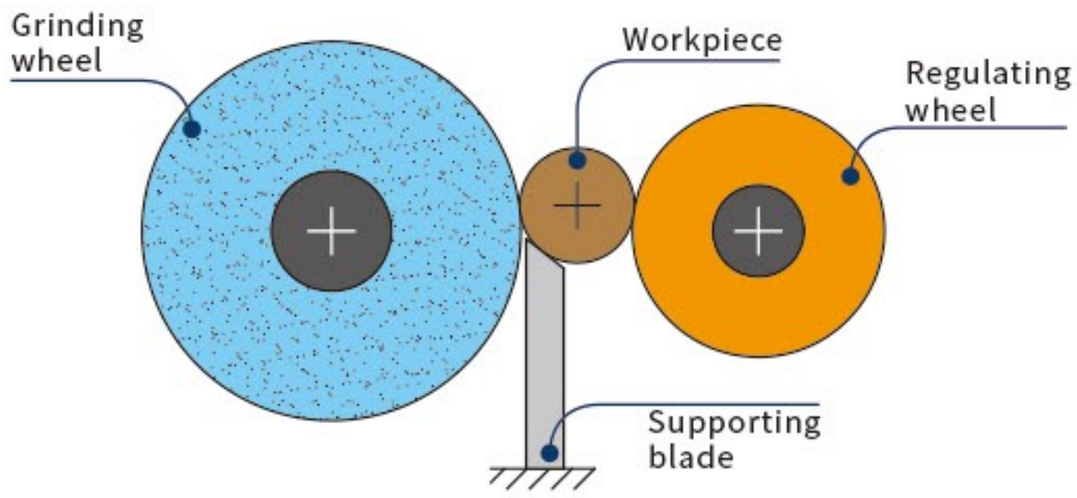

- Centerless grinder is mostly used for automotive industry, appliance production, and precision mold shaft parts.
- With the support of grinding wheel, regulating wheel, and supporting blade, the part will move toward the grinding wheel axial direction and processing cylindrical grinding at the same time.
- The grinding wheel is used for grinding operation, and the regulating wheel is controlling the rotation of the parts and produces infeed speed. The supporting blade on the other hand provides stable support during grinding operation.
- All three mechanisms operated together with various operation methods, the final desired part dimension, roundness,cylindricity, and roughness can be achieved.
- Not only centerless grinders provide high productivity, continuous grinding operation, and great part stock removing ability, with automatic loading & unloading systems equipped as optional accessories can lead to massive production.

UC series centerless grinder

CNC model

NC model

S model

Thrufeed grinding operation

Through adjusting the regulating wheel inclining angle to achieve axial infeed, which is suitable for continuous grinding of long parts, shafts without center hole, and sleeve parts.

Infeed grinding operation

Through moving the regulating wheel seat toward the grinding wheel direction to grind parts with shoulder, cone and multiple steps.

Grinding applications

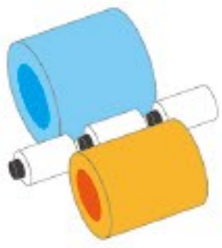

Thrufeed grinding

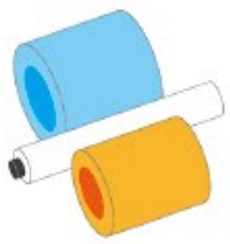

Thrufeed grinding

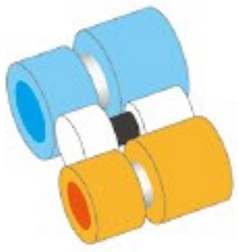

Infeed grinding

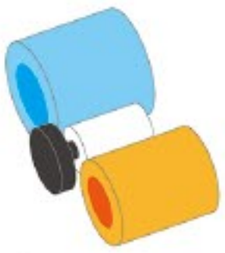

Infeed grinding

Infeed grinding

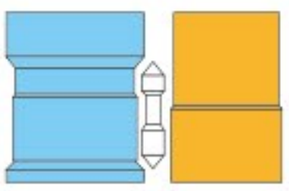

Infeed grinding

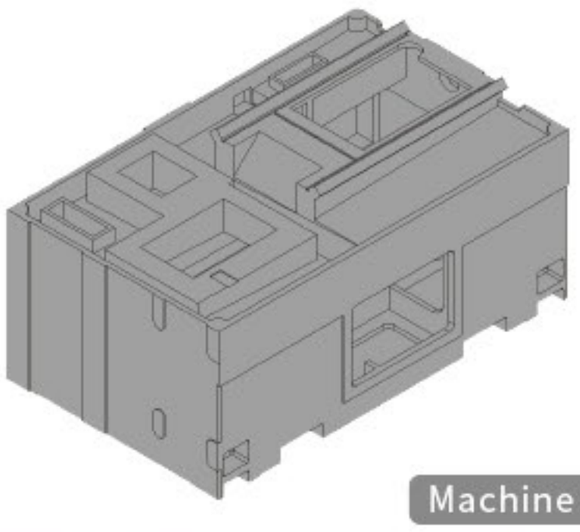
Machine base

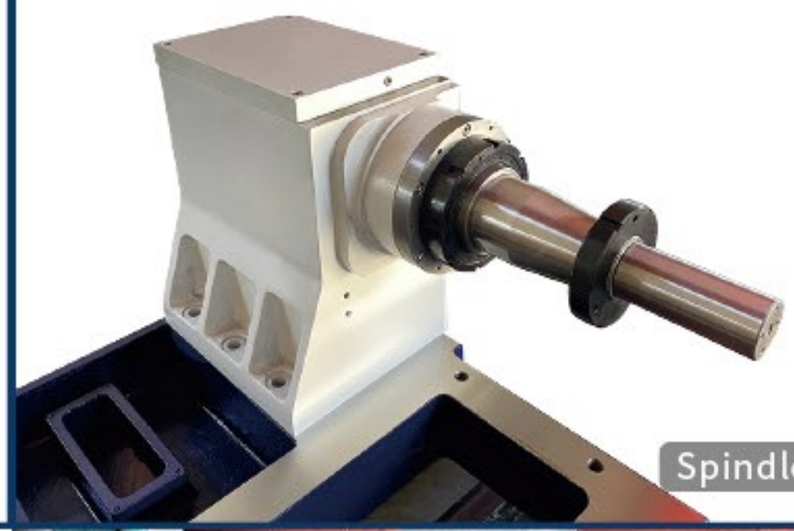
Spindles

Hydraulic dressing unit

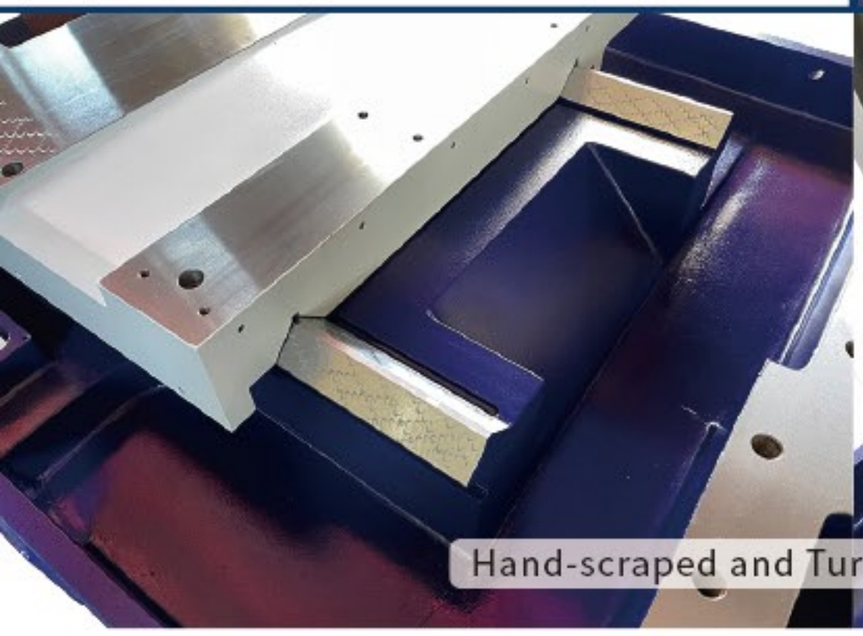
Hand-scraped and Turcite coated slide way

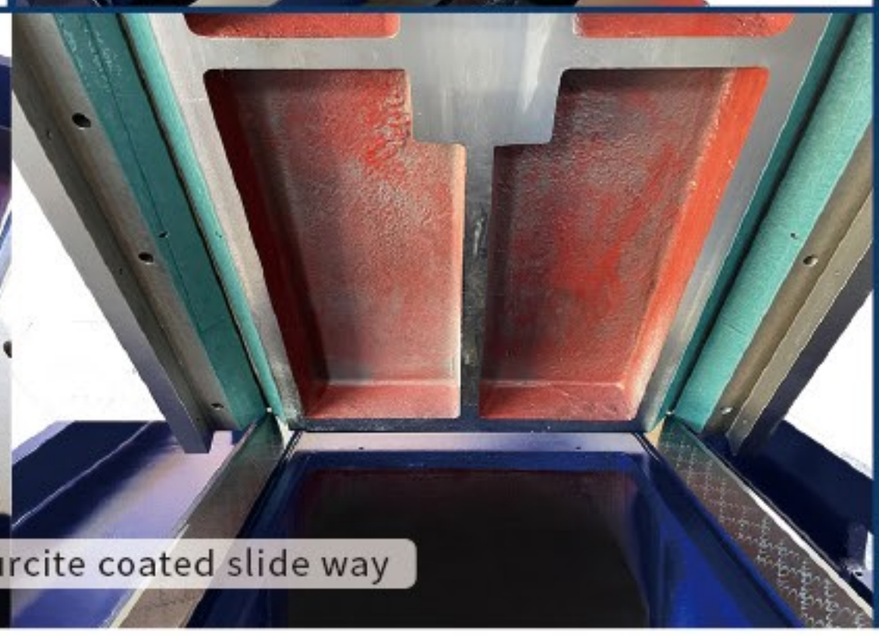

Regulating wheel system

Machine base

The base is manufactured from high quality cast iron, with tempering control and stress relief treatment to provide the best rigidity and long-term stability performance.

Spindles

The grinding wheel & regulating wheel spindles are made of NI-CAR-MO alloy steel, with hardening and tempering control to ensure the ability of taking high torque and extend the lifetime.

Dressing unit

Hand-scraped guide ways on the dressing unit, driven by hydraulic cylinder provides stable movement and outstanding dressing performance.

Regulating wheel seat

The regulating wheel seat travels on double inverted V slide ways, which are hand-scraped and Turcite coated for precise and smooth movement to ensure high accuracy grinding operation.

Regulating wheel system

The regulating wheel is driven by infinite-variable servo motor with gear reducer to provide best speed and torque stability performance.The notched belt driven transmission drastically reduce vibration and noise.

Pressure interlock

A pressure switch interlock prevents spindle start-up until oil pressure is established. This pressure switch interlock also stops the spindle if oil pressure fails for longer spindle life.

Machine specifications

Model		UC-1206 S
GRINDING CAPACITY	Part diameter (std. workrest)	Ø2-30 mm
	Part diameter (special workrest)	Ø30-50 mm
	Size (OD x Width x Bore)	Ø305 x 150 x Ø120 mm
	Spindle speed	1900 rpm
	Dressing increment (gra. / rev.)	0.01 / 1.5 mm
REGULATING WHEEL	Size (OD x Width x Bore)	Ø205 x 150 x Ø90 mm
	Spindle speed (infinite variable)	15-300 rpm
	Upper slide handwheel	gra. 0.02 / rev. 4 mm
	Upper slide micro-feed handwheel	gra. 0.001 / rev. 0.1 mm (Opt.)
	Swiveling angle (left / right)	±5°
	Inclining angle (front / rear)	+5° ~ -3°
	Dressing increment	gra. 0.01 / rev. 1.5 mm
	Lower slide handwheel	gra. 0.05 / rev. 7 mm
	Lower slide micro-feed handwheel	gra. 0.001 / rev. 0.2 mm
MOTOR	Grinding wheel motor	5.5 kw
	Regulating wheel servo motor	2 kw
	Hydraulic motor	0.75 kw
WEIGHT	Net weight	1800 kg
	Gross weight	2200 kg
PACKING SIZE	Length x width x height	226 x 195 x 182 cm

* Uni-tech reserves the right to modify the design,specification mechanisms etc. without prior notice. *

Machine specifications

Model		UC- 1808 / 1810 / 1812 S	UC- 2008 / 2010 / 2012 S
GRINDING CAPACITY	Part diameter (std. workrest)	Ø2-60 mm	Ø2-60 mm
	Part diameter (special workrest)	Ø60-100 mm	Ø60-100 mm
GRINDING WHEEL	Size (OD x Width x Bore)	Ø455 x 205 x Ø228.6 mm (08)	Ø508 x 205 x Ø304.8 mm (08)
		Ø455 x 255 x Ø228.6 mm (10)	Ø508 x 255 x Ø304.8 mm (10)
		Ø455 x 305 x Ø228.6 mm (12)	Ø508 x 305 x Ø304.8 mm (12)
	Spindle speed	1400 rpm	1300 rpm
	Dressing increment	gra. 0.01 / rev. 2 mm	gra. 0.01 / rev. 2 mm
REGULATING WHEEL	Size (OD x Width x Bore)	Ø255 x 205 x Ø111.2 mm (08)	Ø305 x 205 x Ø127 mm (08)
		Ø255 x 255 x Ø111.2 mm (10)	Ø305 x 255 x Ø127 mm (10)
		Ø255 x 305 x Ø111.2 mm (12)	Ø305 x 305 x Ø127 mm (12)
	Spindle speed (infinite variable)	15-300 rpm	15-300 rpm
	Upper slide handwheel	gra. 0.05 / rev. 3.5 mm	gra. 0.05 / rev. 3.5 mm
	Upper slide micro-feed handwheel	gra. 0.001 / rev. 0.07 mm	gra. 0.001 / rev. 0.07 mm
	Swiveling angle (left / right)	±5°	±5°
	Inclining angle (front / rear)	+5° ~ -3°	+5° ~ -3°
	Dressing increment	gra. 0.01 / rev. 2 mm	gra. 0.01 / rev. 2 mm
	Lower slide handwheel	gra. 0.05 / rev. 9 mm	gra. 0.05 / rev. 9 mm
	Lower slide micro-feed handwheel	gra. 0.001 / rev. 0.2 mm	gra. 0.001 / rev. 0.2 mm
MOTOR	Grinding wheel motor	11 kw	15 kw
	Regulating wheel servo motor	3 kw	3 kw
	Hydraulic motor	0.75 kw	0.75 kw
WEIGHT	Net weight	3300 kg	3400 kg
	Gross weight	3600 kg	3700 kg
PACKING SIZE	Length x width x height	275 x 225 x 185 cm	275 x 225 x 185 cm

* Uni-tech reserves the right to modify the design,specification mechanisms etc. without prior notice. *

Machine specifications

NC model

The regulating wheel lower slide seat is driven by servo motor and precision ballscrew, the infeed location can thus be precisely located.

Additional advantages for productivity and operation accuracy by using the convenient user-friendly PLC touch screen control system.

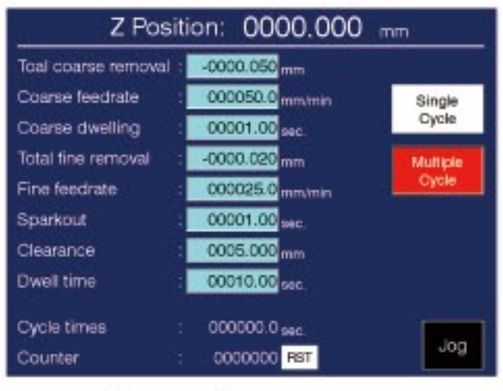

Operation screen

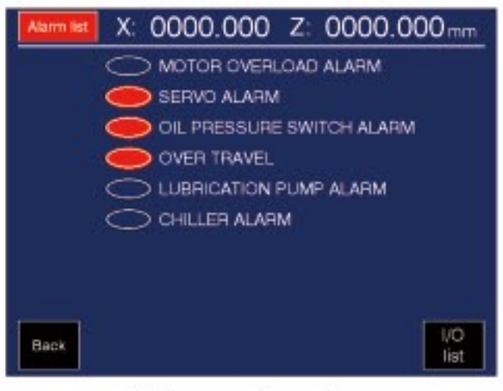

Alarm display

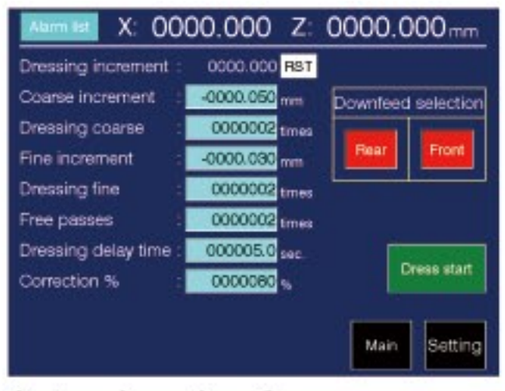

Auto. dressing & compensation function (opt.)

Model		UC-1206 NC
GRINDING CAPACITY	Part diameter (std. workrest)	Ø2-30 mm
	Part diameter (special workrest)	Ø30-50 mm
	Size (OD x Width x Bore)	Ø305 x 150 x Ø120 mm
	Spindle speed	1900 rpm
	Dressing increment	gra. 0.01 / rev. 1.5 mm
REGULATING WHEEL	Size (OD x Width x Bore)	Ø205 x 150 x Ø90 mm
	Spindle speed (infinite variable)	15-300 rpm
	Upper slide handwheel	gra. 0.02 / rev. 4 mm
	Upper slide micro-feed handwheel	gra. 0.001 / rev. 0.1 mm (Opt.)
	Swiveling angle (left / right)	±5°
	Inclining angle (front / rear)	+5° ~ -3°
	Dressing increment	gra. 0.01 / rev. 1.5 mm
	Lower slide MPG x1, x10, x100	0.001 / 0.01 / 0.1 mm
MOTOR	Grinding wheel motor	5.5 kw
	Regulating wheel servo motor	2 kw
	Lower slide Infeed servo motor	1 kw
	Hydraulic motor	0.75 kw
WEIGHT	Net weight	1800 kg
	Gross weight	2200 kg
PACKING SIZE	Length x width x height	226 x 195 x 182 cm

* Uni-tech reserves the right to modify the design,specification mechanisms etc. without prior notice. *

Machine specifications

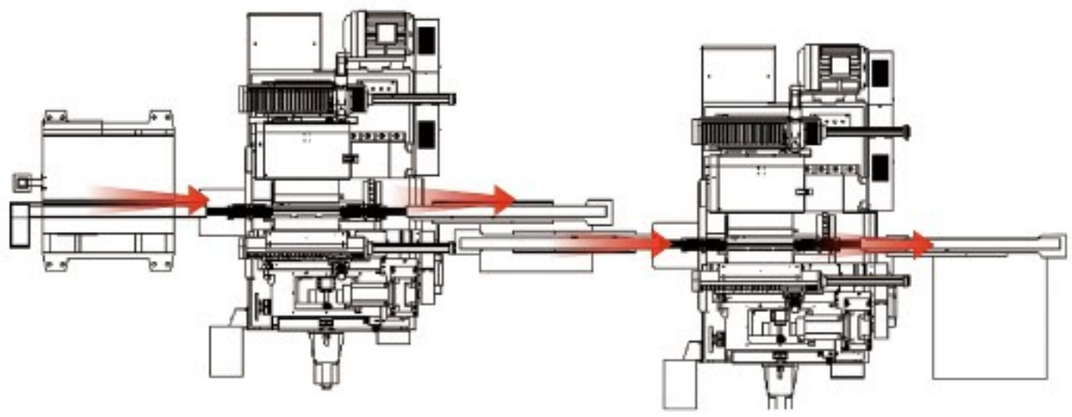

Thrufeed automation system

Multiple machines can be linked to automation system as a complete production line for rough, medium, and fine grinding operation for saving machine adjustment time consumption, reduce part loading & unloading time, and increase operation efficiency.

Model		UC- 1808 / 1810 / 1812 NC	UC- 2008 / 2010 / 2012 NC
GRINDING CAPACITY	Part diameter (std. workrest)	Ø2-60 mm	Ø2-60 mm
	Part diameter (special workrest)	Ø60-100 mm	Ø60-100 mm
GRINDING WHEEL	Size (OD x Width x Bore)	Ø455 x 205 x Ø228.6 mm (08)	Ø508 x 205 x Ø304.8 mm (08)
		Ø455 x 255 x Ø228.6 mm (10)	Ø508 x 255 x Ø304.8 mm (10)
		Ø455 x 305 x Ø228.6 mm (12)	Ø508 x 305 x Ø304.8 mm (12)
	Spindle speed	1400 rpm	1300 rpm
	Dressing increment	gra. 0.01 / rev. 2 mm	gra. 0.01 / rev. 2 mm
REGULATING WHEEL	Size (OD x Width x Bore)	Ø255 x 205 x Ø111.2 mm (08)	Ø305 x 205 x Ø127 mm (08)
		Ø255 x 255 x Ø111.2 mm (10)	Ø305 x 255 x Ø127 mm (10)
		Ø255 x 305 x Ø111.2 mm (12)	Ø305 x 305 x Ø127 mm (12)
	Spindle speed (infinite variable)	15-300 rpm	15-300 rpm
	Upper slide handwheel	gra. 0.05 / rev. 3.5 mm	gra. 0.05 / rev. 3.5 mm
	Upper slide micro-feed handwheel	gra. 0.001 / rev. 0.07 mm	gra. 0.001 / rev. 0.07 mm
	Swiveling angle (left / right)	±5°	±5°
	Inclining angle (front / rear)	+5° ~ -3°	+5° ~ -3°
	Dressing increment	gra. 0.01 / rev. 2 mm	gra. 0.01 / rev. 2 mm
	Lower slide MPG x1, x10, x100	0.001 / 0.01 / 0.1 mm	0.001 / 0.01 / 0.1 mm
MOTOR	Grinding wheel motor	11 kw	15 kw
	Regulating wheel servo motor	3 kw	3 kw
	Lower slide Infeed servo motor	1 kw	1 kw
	Hydraulic motor	0.75 kw	0.75 kw
WEIGHT	Net weight	3300 kg	3400 kg
	Gross weight	3600 kg	3700 kg
PACKING SIZE	Length x width x height	275 x 225 x 185 cm	275 x 225 x 185 cm

* Uni-tech reserves the right to modify the design,specification mechanisms etc. without prior notice. *

CNC control system

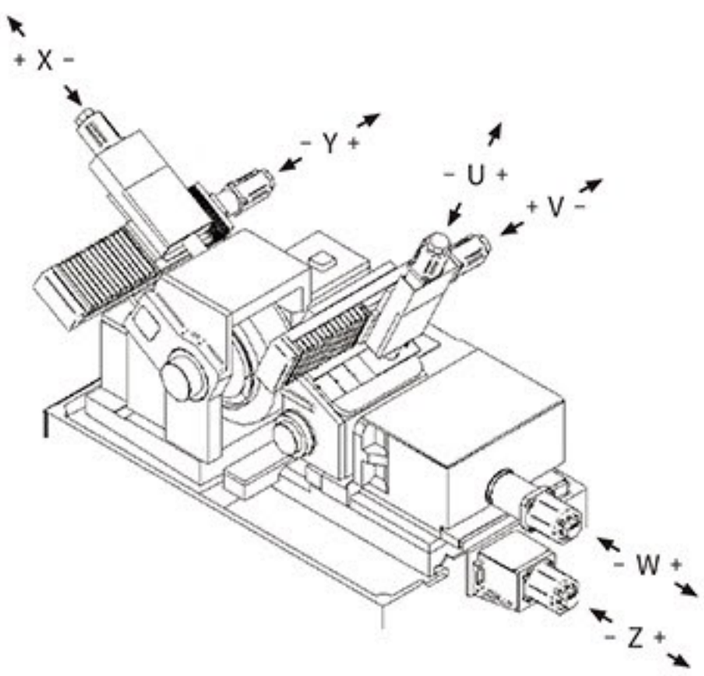

X axis : Grinding wheel dressing infeed (vertical)
Y axis : Grinding wheel dressing traverse movement (horizontal)
Z axis : Regulating wheel lower slide infeed
U axis : Regulating wheel dressing infeed (vertical)
V axis : Regulating wheel dressing traverse movement (horizontal)
W axis : Regulating wheel upper slide infeed

Automation solution

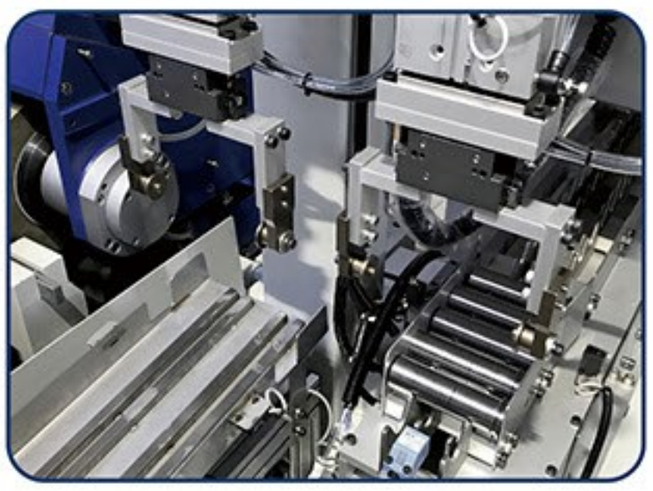

Model		UC- 1808 / 1810 / 1812 CNC	UC- 2008 / 2010 / 2012 CNC
GRINDING CAPACITY	Part diameter (std. workrest)	Ø2-60 mm	Ø2-60 mm
	Part diameter (special workrest)	Ø60-100 mm	Ø60-100 mm
GRINDING WHEEL	Size (OD x Width x Bore)	Ø455 x 205 x Ø228.6 mm (08)	Ø508 x 205 x Ø304.8 mm (08)
		Ø455 x 255 x Ø228.6 mm (10)	Ø508 x 255 x Ø304.8 mm (10)
		Ø455 x 305 x Ø228.6 mm (12)	Ø508 x 305 x Ø304.8 mm (12)
	Spindle speed	1400 rpm	1300 rpm
REGULATING WHEEL	Size (OD x Width x Bore)	Ø255 x 205 x Ø111.2 mm (08)	Ø305 x 205 x Ø127 mm (08)
		Ø255 x 255 x Ø111.2 mm (10)	Ø305 x 255 x Ø127 mm (10)
		Ø255 x 305 x Ø111.2 mm (12)	Ø305 x 305 x Ø127 mm (12)
	Spindle speed (infinite variable)	15-300 rpm	15-300 rpm
	Swiveling angle (left / right)	±5°	±5°
	Inclining angle (front / rear)	+5° ~ -3°	+5° ~ -3°
MOTOR	Grinding wheel motor	11 kw	15 kw
	Regulating wheel servo motor	3 kw	3 kw
	(X) Grinding wheel dressing infeed servo motor	0.75 kw	0.75 kw
	(Y) Grinding wheel dressing traverse servo motor	0.75 kw	0.75 kw
	(Z) Regulating wheel lower slide infeed servo motor	1.2 kw	1.2 kw
	(U) Regulating wheel dressing infeed servo motor	0.75 kw	0.75 kw
	(V) Regulating wheel dressing traverse servo motor	0.75 kw	0.75 kw
	(W) Regulating wheel upper slide infeed servo motor	1.2 kw	1.2 kw
	Hydraulic motor	0.75 kw	0.75 kw
WEIGHT	Net weight	3500 kg	3600 kg
	Gross weight	3800 kg	3900 kg
PACKING SIZE	Length x width x height	335 x 228 x 200 cm	335 x 228 x 200 cm

* Uni-tech reserves the right to modify the design,specification mechanisms etc. without prior notice. *

Blade selection

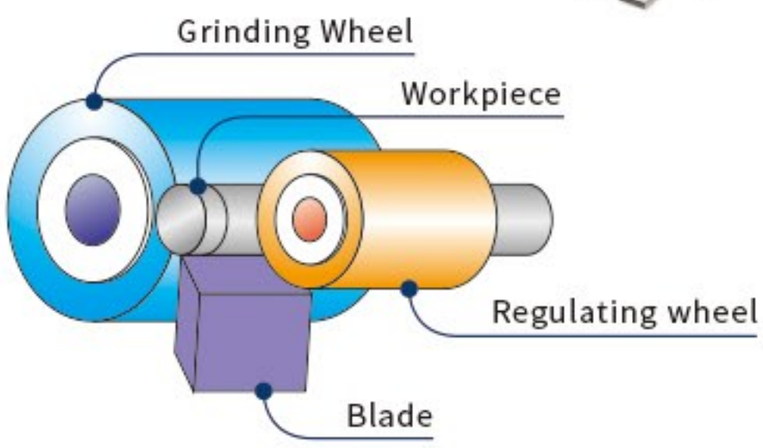

Part diameter	Blade thickness	Part diameter	Blade thickness
Ø 1.5 ~ 2.5	1	Ø 10 ~ 16	8
Ø 2.6 ~ 4	2	Ø 12 ~ 25	10
Ø 4 ~ 6	3	Ø 15 ~ 30	10/13
Ø 7 ~ 8	4	Ø 30 ~ 50	13/20
Ø 8 ~ 10	6	Ø 40 ~ 60	20

Unit : mm

Standard accessories

Grinding & regulating wheel

Grinding wheel & regulating wheel flange

Wheel extractor

Thrufeed workrest & thrufeed blade

Infeed workrest & infeed blade

Leveling bolts & pads

Balancing arbor & stand

Standard coolant tank

Hydraulic tank

Tools & tool box

Working light

Diamond dresser

Thrufeed input & output guide

Thrufeed safety device

Forming attachment

Infeed part ejector

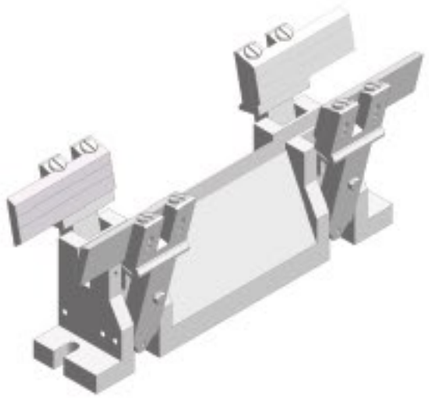

Special thrufeed workrest

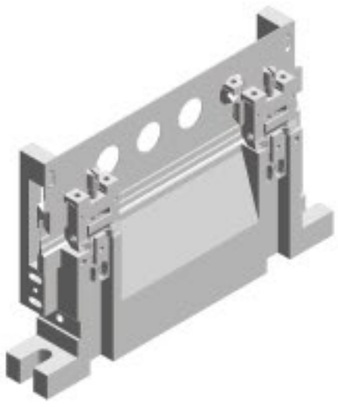

Minor thrufeed workrest

Long thrufeed guides (in & out)

Thrufeed auto. loading system

Thrufeed auto. unloading system

Vibration feeder loading system

Gantry type automation

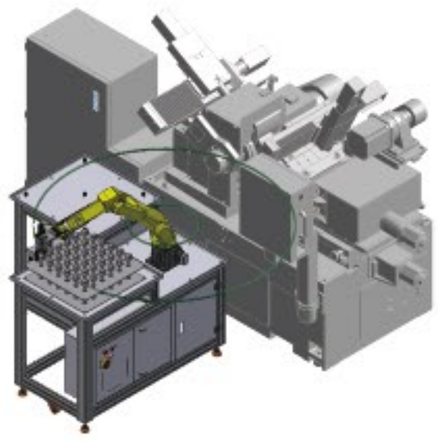

Joint robot automation

Infeed manual loader

Magnetic separator

Magnetic separator & paper filter

Notes

Uni-Tech. UC. 2024. ENG. Vol.04

UNI-TECH
PRECISION SOLUTIONS

Uni-Tech Precision Co., Ltd.
No.48, Ln. 960, Fengzhou Rd., Shengang Dist.,
Taichung City 429, Taiwan
TEL : 886-4-2562-7999
FAX : 886-4-2563-1777

info@utechtw.com

www.utechtw.com